IM-65NE-25

WaterMark
ATS 5200.105
22349, 22350, 22351

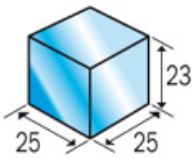

Medium

Product Specifications	
COOLING	Air
WEIGHT	Net: 53kg Packed: 60kg
AC SUPPLY VOLTAGE	220 - 240V / 50Hz 10Amps
REFRIGERANT	R134a
AMBIENT	1 - 40°C
WATER TEMP	5 - 35°C
WATER PRESSURE	50 - 800kPa
ICE PRODUCTION PER 24 HOURS (APPROX)	Air temp: 10°C Water temp: 10°C - 45kg Air temp: 21°C Water temp: 15°C - 44kg Air temp: 32°C Water temp: 21°C - 37kg
ICE PRODUCTION PER CYCLE	0.67kg / 56 pcs
FREEZE CYCLE	22mins
MAX STORAGE CAPACITY	26kg
BIN CONTROL	18kg

Product Range		
PART NO.	DESCRIPTION	LIST PRICE
91000097	IM-65NE-25	$4860.00

IM-65NE-25

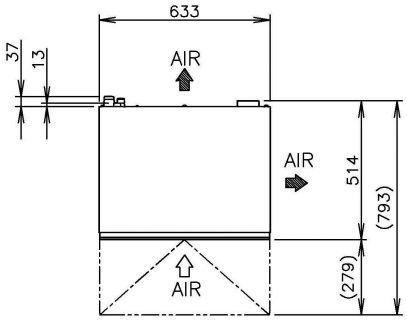
633
37
13
AIR
AIR
AIR
514
(793)
(279)

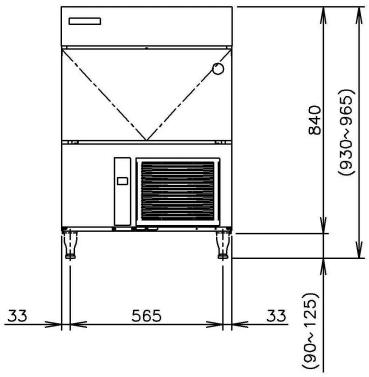
840
(930~965)
(90~125)
33
565
33

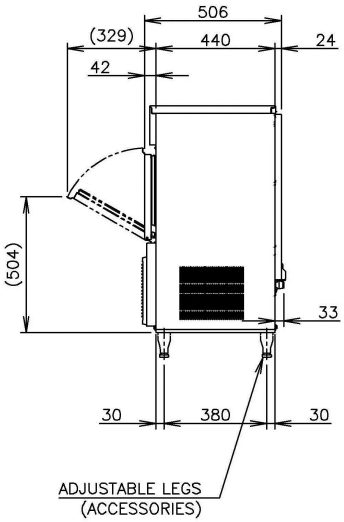
506
(329)
440
24
42
(504)
33
30
380
30
ADJUSTABLE LEGS
(ACCESSORIES)

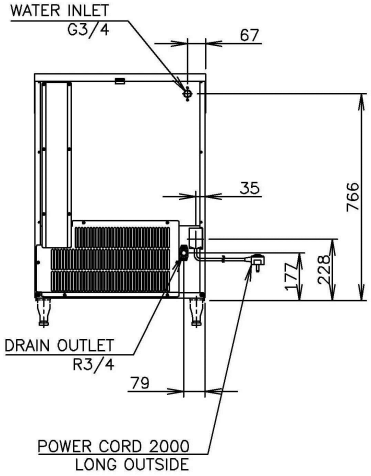
WATER INLET
G3/4
67
35
766
177
228
DRAIN OUTLET
R3/4
79
POWER CORD 2000
LONG OUTSIDE